bet

Handbook of Courtly Graces

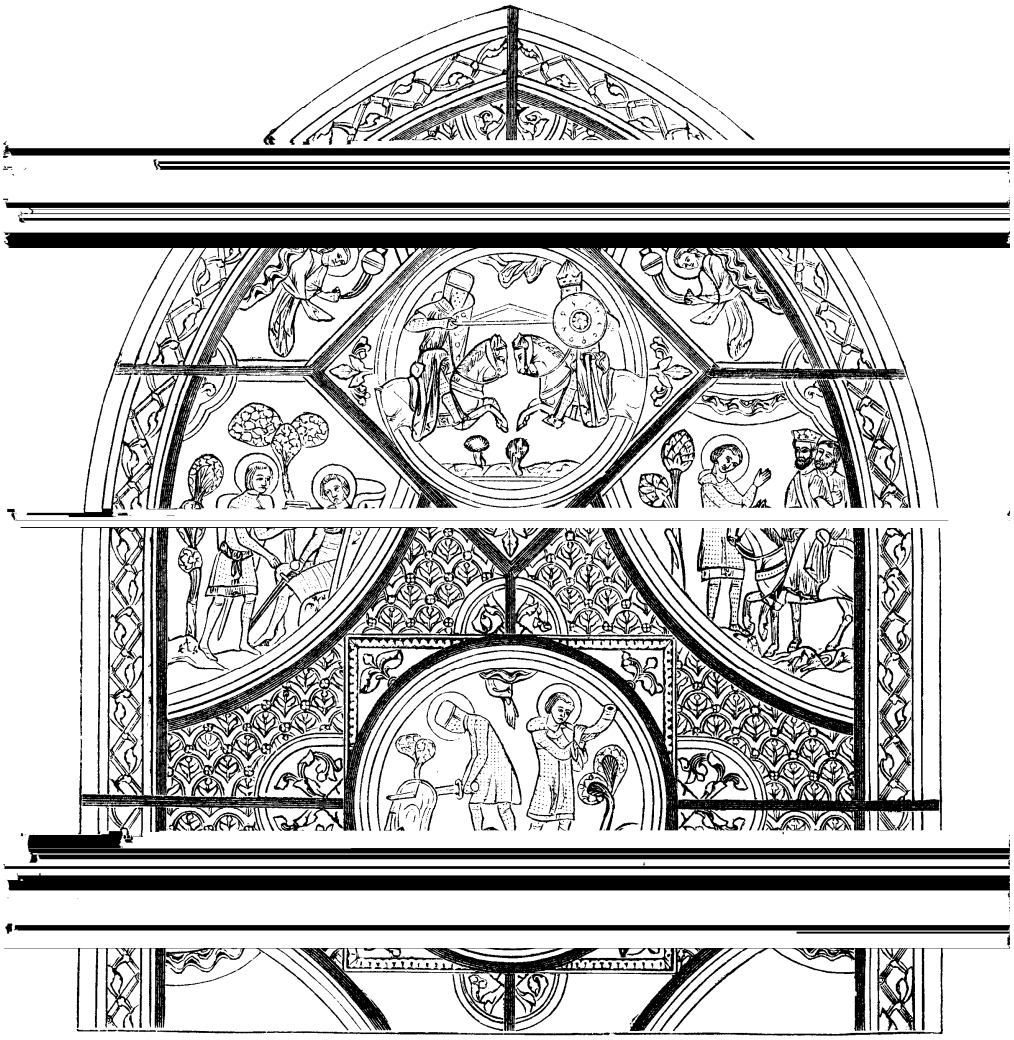

Kingdom of Artemisia
Youth Program

Chapter 1

Welcome to College!

Greetings, young gentle, and welcome to the College of Courtly Graces! We are very glad that you have chosen to join our ranks and begin your training to become a leader in the SCA. This book will introduce you to the College and tell you everything you need to know to get started.

As a student at the College, you will have a chance to learn about medieval life, participate in fun activities, and serve in the glorious Kingdom of Artemisia. You will be assigned a rank based on your age, and you will have the opportunity to distinguish yourself in your rank and in the areas of Arts & Sciences, Chivalry, and Service. When you graduate from the College, you will be well accomplished in many areas and ready to take your place as a leader within the Society.

Sound fun? Sound challenging? Great! Just complete the Artemisia Youth Program Registration Form on the last page of this book and turn in into your local Youth Officer. This form enrolls you in the College of Courtly Graces and allows your Youth Officer to track your progress so you can receive credit for your work.

Need Help?

If you have any questions about the College or anything you read in this handbook, ask your local Youth Officer. If you don't have a Youth Officer in your group, feel free to ask your Seneschal, a local Peer, or contact the Kingdom youth officer at artemisiayouth@crystalcrags.org.

You can also find more information on the Youth Program website at http://www.youth.artemisia.sca.org/index.htm.

About the College

So you've decided that the College sounds like everything you have ever looked for and you're ready to sign up for life! Okay, well, maybe not, but it sounds like fun, and you're ready to read more about it. So here you go….

In the College, you work on requirements that teach you about medieval life and the SCA. Completed requirements earn you different levels of awards or even a title. Also, while you are a student, you can wear special garb (called regalia) to show that you are a member of the College and entitled to perform particular duties.

The duties that you may perform are assigned by rank. The College is divided into three ranks: Porters (10 to 12 years old), Standard Bearers (13 to 15 years old), and Courtiers (16 to 17 years old). These ranks are discussed in detail in chapter 2. For now, just keep in mind that the regalia, awards, and titles listed in this chapter are open to anyone in the college; however, each rank also has regalia, awards, and titles that are explained in the second chapter.

Regalia

Everyone in the College is entitled to wear the following regalia:

- A tabard with a double border of gold trim. Unless your local group has a specific tabard design, you can make the tabard any color you want.
- A belt. As you probably already know, different colors of belts mean different things in the SCA. The safest colors to choose are brown or black; if you would like another color, check with your Youth Officer or Seneschal first.
- A bead favor. A bead favor is a decorative pouch that you can hang from your belt to display your awards. If you were a member of the Page School, you should already have a bead favor. If you are new to the program, ask your Youth Officer for a pattern, or make your own favor similar to one in the picture below.

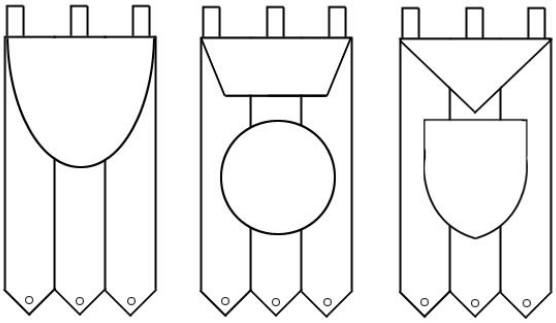

The only time you are required to wear your regalia is when you are performing your official duties. Many of the duties require training or a special recommendation. This regalia, plus the regalia specific to your rank, lets everyone know you are an official member of the College that is approved to perform the duties.

Awards

The awards in the College of Courtly Graces are Kingdom-level awards, which means when you earn an award, it will presented to you by a member of the Royalty in court. Award requirements are listed on pages 15 through 42. Your local Youth Officer will sign off your requirements as you finish them. If you don't have a Youth Officer, any officer, Peer, or member of the Royalty can sign your requirements sheet, as long they are not members of your family or household.

General Awards

You can earn awards in the categories of Arts & Sciences, Chivalry, and Service. Each category is divided into five classes of requirements. The basic awards are colored beads as shown in the following table.

Category	**Class**	**Bead Award**
Service (left)	Chiurgeonate	Red Bead
	Personal Assistance	Purple Bead
	Event/Feast	Green Bead
	Marshalling	Yellow Bead
	Leadership	Blue Bead
Arts & Sciences (middle)	Arts	Red Bead
	Sciences	Purple Bead
	Heraldry	Green Bead
	Research	Yellow Bead
	Performance	Blue Bead
Chivalry (right)	Combat	Red Bead
	Arms and Armor	Purple Bead
	Courtly Graces	Green Bead
	Research	Yellow Bead
	Strategy and Tactics	Blue Bead

These beads are to be sewn on your bead favor in segments stated. You should place your Service awards on the left side, your Arts & Sciences awards on the middle, and your Chivalry awards on the right side.

Silver Awards

After you earn a colored bead in all five classes of a category (for example, you complete all of the basic Chivalry requirements and have five Chivalry beads), you can earn an advanced silver bead award.

Choose a class (such as Strategy & Tactics, for example) and think of a project you would like to do in that class. After your Youth Officer approves the project, write the project down in the space provided in chapter 3. When you complete the project, you will be awarded a silver bead to hang below the colored bead in that class. You can earn up to 15 silver awards, one for each colored bead.

Gold Awards

After you have completed all of the basic requirements and earned a silver bead in each category, you can earn the exceptional award of a gold bead. In other words, you must earn all of your colored beads (15 total) and a silver bead in Arts & Sciences, Chivalry, and Service (3 total).

A gold project is similar to a silver project, except it should be more challenging. Think of a project that will stretch what you can do, get it approved by your Youth Officer, and write it

in the space in chapter 3. When you complete your project, you will be awarded a gold bead to hang on the strand. You can complete a total of three gold awards, one for Arts & Sciences, one for Chivalry, and one for Service.

> **IMPORTANT NOTE:** Don't attempt suicide by trying to complete all of your requirements too quickly! This program is meant to keep you busy for 7 years (from age 10 through age 17). You can work as quickly as you want as long as you are having fun. When it's not fun anymore, slow down and take a break.

Titles

Are you particularly talented in Arts & Sciences? Do you excel at Chivalry? Or do you love Service instead? Excellent work in any of these areas offers you a chance to earn one of the following titles: Warrior (Chivalry), Craftsman (Arts & Sciences), or Aide (Service). Before you can earn a title, you must

- Earn 5 silver beads in the area where you want the title.
- Possess a gold bead in the area where you want your title.
- Complete a special project.
- Be recommended by your local Youth Officer or Seneschal.

When you complete all of these requirements, you will be presented with a gold medallion that shows your new rank.

Because titles are so difficult to earn, those who earn them are considered the elite of the College. Title-bearers are the role models of the Youth Program and are treated with great respect. They are expected to behave with courtesy, patience, and valor in all situations because they are the best of the best.

Space where you can write down your Title Project can be found in chapter 3. Before beginning your Title Project, your local Youth Officer or Seneschal *and* a Kingdom youth officer must approve it.

Chapter 2

Ranks in the College

As described in Chapter 1, the College of Courtly Graces is made up of three ranks: Porters, Standard Bearers, and Courtiers. Like in the Middle Ages, each of these ranks has special duties and privileges. You can also earn senior rankings that allow you perform special duties that the regular ranks cannot perform.

Porters (ages 10-12)

In the Middle Ages, porters were responsible for watching the entrances to manors, castles, and other important residences. As a Porter in the College, your duties will be about watching entrances to events and helping people who are coming and going. Before you can complete these duties, however, you must complete training as a Porter.

Basic Training and Duties

When you first become a Porter, you will need to complete some basic training. Once that training is finished, you can help at events by performing your special duties.

Basic Certification Requirements

Completing these requirements will help train you in your new duties. These requirements must be completed before you can perform the basic duties of a Porter.

1. Guard the door or perimeter at court under supervision of a Senior Porter.

   _____ _____
   Official Signature Date

2. Sew an armband displaying the Porter badge (see page 6).

   _____ _____
   Official Signature Date

3. Volunteer for at least one hour at an event entrance and write a short summary of what you saw and did.

   _____ _____
   Official Signature Date

4. Memorize the devices of all of the Kingdom offices and be able to recognize them on sight.

   _____ _____
   Official Signature Date

When all of the requirements are signed off, you are an official Porter and you can wear the badge of your rank: a portcullis. The armband that you make as one of your requirements is proof that you are a Porter and can perform the basic duties of a Porter.

Basic Duties

When you have completed your training as a Porter, you can perform basic duties that assist at events. A Porter's duties are as follows:

- Guard the doors or perimeter in court when called upon to do so, and make sure everyone in the area stays quiet.
- Help as necessary at the event entrance.
- Extend a special welcome to newcomers and help them find information.
- Continue to complete the duties of a Cupbearer and Page when asked.

How to Complete Your Duties

Court Guard: Talk to the court herald or the local Youth Officer to sign up as a perimeter guard during court. Arrive for court 10 minutes early to help usher people and find chairs, if necessary. Make sure you decide with any other Porters where to stand before court begins. Politely remind noisy people to be quiet during court. Stand tall and proud; you are helping defend the Royalty!

Event Entrance: When you go to an event, you should tell the people at the entrance booth (also called the Troll booth) that you are available to help. Show them your armband and explain that you are a Porter in the youth program. The person in charge at the entrance may ask you to help take money, forms, or run errands. You should volunteer for only one hour at a time; too much time can make you too tired and prevents other Porters from helping too.

Help Newcomers: You should walk around the site when you first get there to see where everything is. Pay attention to where the Royalty (if any) are, where the merchants set up, and where the fighting will be. If you see anyone who looks lost, approach them and ask if you can help. If you can't answer their question, direct them to the event entrance or someone in charge.

Act as Cupbearer or Page: Not all events will have children who are officially Cupbearers or Pages. If there are no Cupbearers or Pages at the event, don't hesitate to help if one of the

Royalty needs a drink or someone needs you to run an errand. However, always give the younger kids first chance if they are there.

Advanced Training and Duties

Doing the same thing all the time can get boring. That's why, if you work hard and perform your basic duties as a Porter, you can earn additional duties and privileges by becoming a Senior Porter. Senior Porters have additional training they need to complete, and they have special duties that are more fun and carry more responsibility.

Senior Porter Certification Requirements

These requirements must be completed before you can become a Senior Porter.

1. Earn at least 6 beads for your bead favor.

   _____ _____
   Official Signature Date

2. Add a gold border to the Porter badge on your armband.

   _____ _____
   Official Signature Date

3. Obtain a recommendation from your Youth Program Officer, Youth Combat Marshal, or Youth Rapier Marshal.

   _____ _____
   Official Signature Date

4. Possess a personal weapon (boffer or otherwise) and be able to explain the rules governing the safe use of the weapon in public.

   _____ _____
   Official Signature Date

Senior Porter Duties and Privileges

As a Senior Porter, you can become a member of the elite Merchant Guard. When a merchant asks for help, Merchant Guards may help transport and set up the merchant's wares, guard against shoplifters and other dishonest behavior, and generally help the merchants with whatever they request.

Senior Porters are also responsible for organizing younger Porters. As a Senior Porter, you are in charge of setting and leading the perimeter guard in court, instructing Porters in their duties, and setting an example. The gold border on your armband tells everyone that you can be trusted and are able to perform more advanced duties.

Standard Bearers (ages 13-15)

Standard Bearers have always been an important part of the Middle Ages. During wars and battles, the standard bearer was the person that everyone followed to find people on their own side. People on the other side of the battle would often try to win battles by attacking the standard bearer and knocking down the flag, which caused confusion over which way the fighters should go.

Like the standard bearers in the Middle Ages, Standard Bearers in the College are responsible for holding standards (flags) during processions, court, and battles. During adult heavy combat, you will need to hold the standard on the sidelines of the battle, but during boffer tournaments, you may participate in the battles as a true standard bearer. You will also "uphold the standards" of the College and the SCA by helping with security and enforcing youth program rules.

Basic Training and Duties

When you first become a Standard Bearer, you will need to complete basic training so that you can complete your duties. It is important to understand how to perform your duties, because Standard Bearers work closely with Peers and Royalty and are very visible during court and battles.

Basic Certification Requirements

Completing these requirements will help train you in your new duties. These requirements must be completed before you can perform the basic duties of a Standard Bearer.

1. Train with a Senior Standard Bearer or Herald on the proper way to carry a standard.

   _____ _____
   Official Signature Date

2. Sew an armband displaying the Standard Bearer badge (see page 9).

   _____ _____
   Official Signature Date

3. Attend a security orientation meeting or training class at an event.

   _____ _____
   Official Signature Date

4. Know the Youth Program rules and policies.

   _____ _____
   Official Signature Date

When all of the requirements are signed off, you are an official Standard Bearer and you can wear the badge of your rank: a standard. The armband that you make as one of your requirements is proof that you are a Standard Bearer and can perform the basic duties of a Standard Bearer.

Basic Duties

When you have completed your training as a Standard Bearer, you can perform basic duties that assist at events. A Standard Bearer's duties are as follows:

- Carry standards during processions and hold standards during court and on the sidelines of battles.
- Assist with safety and security at events.
- Help enforce youth program rules and policies.
- Continue to complete the duties of a Cupbearer, Page, and Porter when asked.

How to Complete Your Duties

Carry Standards: Most people who have standards set them up near their tent during camping events. Politely ask anyone you see with a standard if you may have the honor of being their Standard Bearer for the event. If you are at an event where people do not have their standards displayed, ask Royalty, Peers, or Kingdom officers; they are the most likely to have a standard stored somewhere. If you are too nervous to ask (that's okay), ask a youth officer to ask for you.

Once you ask someone if you can carry a standard, you are responsible for carrying it for them when they ask during the entire event, unless you trade with somebody else. Ask if they need your services before court, battles, and processions. Some members of the Royalty may even ask you to become a permanent part of their "retinue" or people who help them. This is more than okay; this is great! If you feel comfortable with the person who asked you, accept this honor with thanks. This is a great chance for you to get to know an important person in the SCA.

Security: When you go to an event, find out who is in charge of security at the event (ask at the event entrance if you need to know who it is). Show that person your armband and explain that you are available to help with security. Limit how long you volunteer to two hours or less. Because security is so important at events, you can lose the privilege of this duty forever if you mess around. Be sure to follow instructions, and be responsible!

Enforce Youth Program Rules: You are the "security guards" of the youth program. That is why you need to learn the rules and policies as part of your requirements. For example, if you find a little boy or girl wandering around alone, help them find the person they came to the event with. If someone is interrupting a class or activity, offer to escort them back to their mom or dad. You can get a current copy of the most important rules and policies from your local youth officer. These may change, so check with your youth officer before events to make sure everything is the same.

Act as Cupbearer, Page, or Porter: Not all events will have children who are officially Cupbearers, Pages, or Porters. If there are no kids that age at the event, don't hesitate to help if one of the Royalty needs a drink, someone needs you to run an errand, or the perimeter of court is unguarded. However, always give the younger kids first chance if they are there.

Advanced Training and Duties

When you perform your duties as a Standard Bearer well, you will have the opportunity to become a Senior Standard Bearer. Senior Standard Bearers have special duties to protect our Royalty and Peers. Of course, you will need to complete special requirements before you can earn this rank.

Senior Standard Bearer Certification Requirements

These requirements must be completed before you can become a Senior Standard Bearer.

1. Earn at least 1 silver bead for your bead favor.

   _____ _____
   Official Signature Date

2. Add a gold border to the Standard Bearer badge on your armband.

   _____ _____
   Official Signature Date

3. Obtain a recommendation from your Youth Program Officer, Youth Combat Marshal, or Youth Rapier Marshal.

   _____ _____
   Official Signature Date

4. Possess an attractive tabard that you can wear during the performance of your duties.

   _____ _____
   Official Signature Date

Senior Standard Bearer Duties and Privileges

As a Senior Standard Bearer, you have the privilege of acting as a personal escort to Royalty and Peers. When a member of the Royalty or a Peerage asks, Escorts may stand guard at their living quarters, summon visitors into their presence, and escort them safely between locations.

Senior Standard Bearers are also responsible for helping younger Standard Bearers learn their duties. If they need help finding a standard to carry, ask some of the people you know you usually want the services of a Standard Bearer. The gold border on your armband tells everyone that you can be trusted to guard important people.

Courtiers

As you probably already know, courtiers during the Middle Ages were important people who were highly favored by the reigning royalty. They supported the kingdom, made friends with important people, and competed for positions in court. These are precisely your duties as a Courtier in the College. As a Courtier, you are old enough to fight in heavy combat and hold most offices in the Kingdom. This is the final step in your leadership training, and it will help you get to know and work with the people that run the Kingdom.

Basic Training and Duties

Your training and duties as a Courtier consist of ways to become part of the SCA leadership. You will work closely with Royalty, Peers, and officers of the realm. You will also have the chance to serve in positions that are important to running the Kingdom.

Basic Certification Requirements

Completing these requirements will help train you in your new duties. These requirements must be completed before you can perform the basic duties of a Courtier.

1. Make or obtain at least one complete outfit of court garb.

   _____ _____
   Official Signature Date

2. Be able to dance 4 period dances without prompting.

   _____ _____
   Official Signature Date

3. Find someone who is willing to take you on as a man-at-arms or lady-in-waiting.

   _____ _____
   Official Signature Date

4. Create an accessory (necklace, medallion, cloak pin, belt, armband, or favor) displaying the Courtier badge (see page 12).

   _____ _____
   Official Signature Date

When all of the requirements are signed off, you are an official Courtier and you can wear the badge of your rank: an arch. The arch stands for your passage from the youth program into the adult programs of the SCA. The accessory that you make as one of your requirements is proof that you are a Courtier and have all the duties and privileges associated with the rank.

Basic Duties

When you have completed the requirements to become a Courtier, you can perform the following duties that increase everyone's enjoyment of the event:

- Add to the pageantry of events by dressing and behaving in a period manner.
- Participate as fully as possible in SCA activities.
- Become either a man-at-arms or lady-in-waiting to a noble of your choice.
- Continue to complete the duties of a Cupbearer, Page, Porter, and Standard Bearer when asked.

How to Complete Your Duties

Dress and Behave in Period: As a Courtier, you set an example for the entire youth program. The younger kids in the program will look up to you in awe. The adults will look at you as shining examples of the next generation of the SCA. Thus it is important that you wear garb as much as you can and act in chivalrous, courtly manner. Avoid wearing mundane clothes (such as t-shirts or tennis shoes). Use period language such as "m'lord" instead of "mister" and "forsooth" instead of "no way, dude!"

Participate in SCA Activities: Don't forget you are old enough to become anything you want now (except King, Marshall, or Exchequer). You can do anything you want, so do it! Become an officer, an event steward, or a member of a household. Start your own household or guild. Teach classes, enter Arts & Sciences, and volunteer for whatever you can. And get out there and fight! It makes it more fun for you and everyone else when you are active and participate in events and meetings.

Become a Man-at-Arms or Lady-in-Waiting: One of your more important duties is to find someone you admire, then become their man-at-arms or lady-in-waiting. You should know this person very well and work closely with them for a while before asking, as this is a personal position. After they accept you as their man-at-arms or lady-in-waiting, be sure to perform your duties (they will tell you what they are). Also, remember to have fun. This is an important position to hold, but it is also a chance to spend time with someone you really admire.

Act as Cupbearer, Page, Porter, or Standard Bearer: Not all events will have children who are officially Cupbearers, Pages, Porters, or Standard Bearers. If there are no kids that age at the event, don't hesitate to help if one of the Royalty needs a drink, someone needs you to run an errand, the perimeter of court is unguarded, or someone needs a flag displayed. However, always give the younger kids first chance if they are there.

Advanced Training and Duties

Senior Courtier is the highest rank in the College of Courtly Graces and in the entire youth program. Senior Courtiers have a say in what activities are planned and when they are held. To become a Senior Courtier, you must meet all of the requirements below and receive a high recommendation.

Senior Courtier Certification Requirements

These requirements must be completed before you can become a Senior Courtier.

1. Earn at least 1 gold bead for your bead favor.

   _____ _____
   Official Signature Date

2. Serve as or assist an event steward or feast steward at either a youth or regular event.

   _____ _____
   Official Signature Date

3. Obtain a recommendation from your Youth Program Officer, Youth Combat Marshal, or Youth Rapier Marshal.

   _____ _____
   Official Signature Date

4. Act as an officer or deputy in your local group for at least 3 months.

   _____ _____
   Official Signature Date

Senior Courtier Duties and Privileges

As a Senior Courtier, you may join the Youth Advisory Board. Members of the board are considered leaders within the Youth Program and, as such, may meet with Youth Officers, Peers, and Royalty about Youth Program issues. The Youth Advisory Board also plans the themes for each year's youth activities and nominates a group for the best youth activity during the previous year.

Chapter 3

Requirements Sheets

To earn awards to add to your bead favor, you must complete the requirements listed in this chapter. After you complete each requirement, have your local Youth Officer sign off in the space marked "official signature." If you don't have a Youth Officer, any officer, Peer, or member of the Royalty can sign your requirements sheet, as long they are not members of your family or household.

When you finish a page of requirements, tear it out and turn it into your local Youth Officer. Colored beads may be presented to you from your Seneschal during a weekly meeting, or at some other time. You will be given gold and silver awards in a special ceremony from a member of the royalty during court.

Good luck and have fun!

Service
Chiurgeonate – Red Bead

Assist an official Chiurgeon for at least one hour at 4 SCA events.

1. _____
   Event

   _____ _____
   Official Signature Date

2. _____
   Event

   _____ _____
   Official Signature Date

3. _____
   Event

   _____ _____
   Official Signature Date

4. _____
   Event

   _____ _____
   Official Signature Date

Complete any 3 of the following requirements:

1. Create a complete first aid kit and show it to a Chiurgeon.

   _____ _____
   Official Signature Date

2. Explain any basic first aid procedure with no assistance.

   _____ _____
   Official Signature Date

3. Research and write a 2-4 page paper on period medicine.

   _____ _____
   Official Signature Date

4. Attend a class on relating to medicine and first aid in medieval times or in the SCA.

   _____ _____
   Official Signature Date

5. Explain to a Chiurgeon a period cure and modern cure for any illness you choose.

   _____ _____
   Official Signature Date

Service
Personal Assistance – Purple Bead

Perform the official duties for your current rank in the College at 4 SCA events. (See p.? For a summary of each rank's duties.)

1. _____
   Event

   _____ _____
   Official Signature Date

2. _____
   Event

   _____ _____
   Official Signature Date

3. _____
   Event

   _____ _____
   Official Signature Date

4. _____
   Event

   _____ _____
   Official Signature Date

Complete any 3 of the following requirements:

1. Act as a water bearer at any tournament.

   _____ _____
   Official Signature Date

2. Spend at least one hour helping set up and take down camp at a camping event.

   _____ _____
   Official Signature Date

3. Contribute at least 3 hours to the event staff at one or more events.

   _____ _____
   Official Signature Date

4. Complete one hour of personal service to a Peer (Knight, Laurel, Pelican).

   _____ _____
   Official Signature Date

5. Research and write a 2-4 page paper on the services owed to one's superior in the feudal system.

   _____ _____
   Official Signature Date

Service
Event/Feast – Green Bead

Assist in any capacity at 4 events.

1. _____
   Event

   _____ _____
   Official Signature Date

2. _____
   Event

   _____ _____
   Official Signature Date

3. _____
   Event

   _____ _____
   Official Signature Date

4. _____
   Event

   _____ _____
   Official Signature Date

Complete any 3 of the following requirements:

1. Complete one hour of service to an event steward.

   _____ _____
   Official Signature Date

2. Complete one hour of service to a feast steward.

   _____ _____
   Official Signature Date

3. Assist with a Page School activity at any event.

   _____ _____
   Official Signature Date

4. Research, document, and plan a period feast menu for any specific time period you choose.

   _____ _____
   Official Signature Date

5. Using a real event announcement as an example, make up an announcement for an event you would like to attend (the event does not have to be a real one).

   _____ _____
   Official Signature Date

Service
Marshalling – Yellow Bead

Assist a Marshal or Youth Marshal in any capacity at 4 SCA events.

1. _____
   Event

   _____ _____
   Official Signature Date

2. _____
   Event

   _____ _____
   Official Signature Date

3. _____
   Event

   _____ _____
   Official Signature Date

4. _____
   Event

   _____ _____
   Official Signature Date

Complete any 3 of the following requirements:

1. Explain the rules of youth combat to a Marshal.

   _____ _____
   Official Signature Date

2. Explain the types of combat in the SCA and age requirements for each to a Marshal,

   _____ _____
   Official Signature Date

3. Help set up, take down, and patrol the Eric at an event.

   _____ _____
   Official Signature Date

4. Research and write a 2-4 page paper on combat safety measures in the Middle Ages.

   _____ _____
   Official Signature Date

5. Assist with youth combat training.

   _____ _____
   Official Signature Date

Service
Leadership – Blue Bead

Act as a mentor to 4 different pages at 4 events.

1. _____
Event

_____ _____
Official Signature Date

2. _____
Event

_____ _____
Official Signature Date

3. _____
Event

_____ _____
Official Signature Date

4. _____
Event

_____ _____
Official Signature Date

Complete any 3 of the following requirements:

1. Act as the event steward at any youth event.

_____ _____
Official Signature Date

2. Act as the feast steward at any youth event.

_____ _____
Official Signature Date

3. Organize or join a guild or household and participate in two activities within the guild or household.

_____ _____
Official Signature Date

4. Teach a class within the youth program.

_____ _____
Official Signature Date

5. With the approval of the youth officer, present an award to a Cup Bearer or Page during Court.

Official Signature

Date

Service
Silver Award Projects

Write down the silver project you want to complete for any of the areas below. Before you start your project, make sure that an official signs in the "approved by" space. You must earn your colored bead in each of these areas before you can begin the silver project.

Chiurgeonate Project

_____
_____
_____
_____
_____

_____ _____
Approved By Date

_____ _____
Official Signature of Completion Date

Personal Assistance Project

_____
_____
_____
_____
_____

_____ _____
Approved By Date

_____ _____
Official Signature of Completion Date

Event/Feast Project

_____
_____
_____
_____
_____

_____ _____
Approved By Date

_____ _____
Official Signature of Completion Date

Service
Silver Award Projects (Cont'd)

Marshalling Project

_____
_____
_____
_____
_____

_____ _____
Approved By Date

_____ _____
Official Signature of Completion Date

Leadership Project

_____
_____
_____
_____
_____

_____ _____
Approved By Date

_____ _____
Official Signature of Completion Date

Service
Gold Award Project

Write down the gold project you want to complete for the area of Service. The project should challenge you to go beyond any other Service projects you have done. You must have all your colored beads and at least one silver bead in Service, Chivalry, and Arts & Sciences to start a gold project. Before you start your project, make sure that an official signs in the "approved by" space.

Service Gold Project

_____
_____
_____
_____
_____
_____
_____
_____
_____
_____
_____
_____
_____
_____
_____

_____ _____
Approved By Date

_____ _____
Official Signature of Completion Date

Service
Title Project

Write down the title project you want to complete for the area of Service. The project, which will earn you the title of Aide, should take at least 30 hours to complete. You must have all your colored beads, all five silver beads in Service, and your gold bead before you can begin your title project. Before you start your project, make sure that an official and a Kingdom youth officer sign in the approval spaces below.

Service Title Project

_____
_____
_____
_____
_____
_____
_____
_____
_____
_____
_____
_____
_____
_____
_____

_____ _____
Approved By (Official) Date

_____ _____
Approved By (Kingdom Youth Officer) Date

_____ _____
Official Signature of Completion Date

Arts & Sciences
Arts – Red Bead

Complete 4 artistic projects (at least 10 hours each) or 2 major projects (20 hours or more each). Present and explain each item to a Laurel or Arts & Sciences officer.

1. _____
   Project

   _____ _____
   Official Signature Date

2. _____
   Project

   _____ _____
   Official Signature Date

3. _____
   Project

   _____ _____
   Official Signature Date

4. _____
   Project

   _____ _____
   Official Signature Date

Complete any 3 of the following requirements (projects completed above cannot be used):

1. Make any item of garb for yourself and wear it to an event.

   _____ _____
   Official Signature Date

2. Attend a class on a period art. Make an item based on what you learned and enter it in a Populace Choice competition.

   _____ _____
   Official Signature Date

3. Create a scroll for someone receiving an award.

   _____ _____
   Official Signature Date

4. Build an accurate model of a medieval structure (castle, cathedral, cottage, etc.).

   _____ _____
   Official Signature Date

5. Make a period storage item (chest, basket, bag, bottle, etc.) and use it at an event.

   _____ _____
   Official Signature Date

Arts & Sciences
Sciences – Purple Bead

Complete 4 scientific projects (at least 10 hours each) or 2 major projects (20 hours or more each). Present and explain each item to a Laurel or Arts & Sciences officer.

1. _____
   Project

   _____ _____
   Official Signature Date

2. _____
   Project

   _____ _____
   Official Signature Date

3. _____
   Project

   _____ _____
   Official Signature Date

4. _____
   Project

   _____ _____
   Official Signature Date

Complete any 3 of the following requirements (projects completed above cannot be used):

1. Attend a class on a period science. Complete a project related to what you learned.

   _____ _____
   Official Signature Date

2. Create a collection of materials or items that existed during the Middle Ages. Display your collection at an Arts & Sciences competition.

   _____ _____
   Official Signature Date

3. Make a timeline showing how a scientific principal developed during the Middle Ages.

   _____ _____
   Official Signature Date

4. Create a model of a medieval scientific item.

   _____ _____
   Official Signature Date

5. Research and write a 2-4 page paper on a medieval scientific principle of your choosing.

   _____ _____
   Official Signature Date

Arts & Sciences
Heraldry – Green Bead

Assist a Herald in the field or in court at 4 SCA events.

1. _____
   Event

   _____ _____
   Official Signature Date

2. _____
   Event

   _____ _____
   Official Signature Date

3. _____
   Event

   _____ _____
   Official Signature Date

4. _____
   Event

   _____ _____
   Official Signature Date

Complete any 3 of the following requirements:

1. Design your own device and submit it to your local Herald.

   _____ _____
   Official Signature Date

2. Be able to recognize and name the arms of each of the Kingdoms without prompting.

   _____ _____
   Official Signature Date

3. Name and draw 6 different ordinaries.

   _____ _____
   Official Signature Date

4. Explain the basic rules of heraldry.

   _____ _____
   Official Signature Date

5. Research and write a 2-4 page paper on the origins and meaning of any historical coat of arms.

   _____ _____
   Official Signature Date

Arts & Sciences
Research – Yellow Bead

Research 4 areas about medieval arts and sciences that interest you. Present your finding about each area in a 5-10 minute presentation or in a 3-4 page paper.

1. _____
   Area of Interest

   _____ _____
   Official Signature Date

2. _____
   Area of Interest

   _____ _____
   Official Signature Date

3. _____
   Area of Interest

   _____ _____
   Official Signature Date

4. _____
   Area of Interest

   _____ _____
   Official Signature Date

Complete any 3 of the following requirements:

1. Submit a research paper to any Arts & Sciences competition.

   _____ _____
   Official Signature Date

2. Create a handout or activity sheet based on your research for any level of the youth program.

   _____ _____
   Official Signature Date

3. Help an adult research a project by finding 3 potential sources.

   _____ _____
   Official Signature Date

4. Using examples, explain the difference between a primary and secondary research source to a Laurel or Arts & Sciences officer.

   _____ _____
   Official Signature Date

5. Research and create your own persona. Submit to Kingdom Youth Minister.

   _____ _____
   Official Signature Date

Arts & Sciences
Performance – Blue Bead

Perform (singing, acting, storytelling, instrument playing, or dancing) at 4 SCA events or bardic circles.

1. _____
   Event

   _____ _____
   Official Signature Date

2. _____
   Event

   _____ _____
   Official Signature Date

3. _____
   Event

   _____ _____
   Official Signature Date

4. _____
   Event

   _____ _____
   Official Signature Date

Complete any 3 of the following requirements:

1. Submit an original article, poem, song, story, or picture to the Sage Brush.

   _____ _____
   Official Signature Date

2. Organize and put on a performance at any event.

   _____ _____
   Official Signature Date

3. Spend at least 3 hours learning a performance skill that you have never tried before.

   _____ _____
   Official Signature Date

4. Interview a favorite SCA performer and write a 2 page summary about what you learned.

   _____ _____
   Official Signature Date

5. Attend a period performance outside of the SCA (ie Shakespeare, period music, etc.). Summarize and comment on the play to a Laurel or Arts & Sciences officer.

   _____ _____
   Official Signature Date

Arts & Sciences
Silver Award Projects

Write down the silver project you want to complete for any of the areas below. Before you start your project, make sure that an official signs in the "approved by" space. You must earn your colored bead in each of these areas before you can begin the silver project.

Arts Project

_____
_____
_____
_____
_____

_____ _____
Approved By Date

_____ _____
Official Signature of Completion Date

Sciences Project

_____
_____
_____
_____
_____

_____ _____
Approved By Date

_____ _____
Official Signature of Completion Date

Heraldry Project

_____
_____
_____
_____
_____

_____ _____
Approved By Date

_____ _____
Official Signature of Completion Date

Arts & Sciences
Silver Award Projects (Cont'd)

Research Project

_____
_____
_____
_____
_____

_____ _____
Approved By Date

_____ _____
Official Signature of Completion Date

Performance Project

_____
_____
_____
_____
_____

_____ _____
Approved By Date

_____ _____
Official Signature of Completion Date

Arts & Sciences
Gold Award Project

Write down the gold project you want to complete for the area of Arts & Sciences. The project should challenge you to go beyond any other A&S projects you have done. You must have all your colored beads and at least one silver bead in Service, Chivalry, and Arts & Sciences to start a gold project. Before you start your project, make sure that an official signs in the "approved by" space.

Arts & Sciences Gold Project

_____
_____
_____
_____
_____
_____
_____
_____
_____
_____
_____
_____
_____
_____
_____

_____ _____
Approved By Date

_____ _____
Official Signature of Completion Date

Arts & Sciences
Title Project

Write down the title project you want to complete for the area of Arts & Sciences. The project, which will earn you the title of Craftsman, should take at least 30 hours to complete. You must have all your colored beads, all five silver beads in Arts & Sciences, and your gold bead before you can begin your title project. Before you start your project, make sure that an official and a Kingdom youth officer sign in the approval spaces below.

Arts & Sciences Title Project

_____
_____
_____
_____
_____
_____
_____
_____
_____
_____
_____
_____
_____
_____
_____

_____ _____
Approved By (Official) Date

_____ _____
Approved By (Kingdom Youth Officer) Date

_____ _____
Official Signature of Completion Date

Chivalry
Combat – Red Bead

Participate or assist with youth combat, rapier or archery at 4 events.

1. _____
   Event

   _____ _____
   Official Signature Date

2. _____
   Event

   _____ _____
   Official Signature Date

3. _____
   Event

   _____ _____
   Official Signature Date

4. _____
   Event

   _____ _____
   Official Signature Date

Complete any 3 of the following requirements:

1. Run a list at any youth combat.

   _____ _____
   Official Signature Date

2. Demonstrate a working knowledge of at least 2 fighting styles.

   _____ _____
   Official Signature Date

3. Learn to use any type of weapon other than a sword.

   _____ _____
   Official Signature Date

4. With the help of a Marshal, organize and run a youth tournament.

   _____ _____
   Official Signature Date

5. Research and write a 2-4 page paper on any aspect of combat in the Middle Ages.

   _____ _____
   Official Signature Date

Chivalry
Arms and Armor – Purple Bead

Attend any 4 armoring groups or classes about arms and armor.

1. _____
Group or Class

_____ _____
Official Signature Date

2. _____
Group or Class

_____ _____
Official Signature Date

3. _____
Group or Class

_____ _____
Official Signature Date

4. _____
Group or Class

_____ _____
Official Signature Date

Chivalry
Courtly Graces – Green Bead

Attend 4 classes relating to grace, courtesy, and/or etiquette.

1. _____
   Class

   _____ _____
   Official Signature Date

2. _____
   Class

   _____ _____
   Official Signature Date

3. _____
   Class

   _____ _____
   Official Signature Date

4. _____
   Class

   _____ _____
   Official Signature Date

Complete any 3 of the following requirements:

1. Learn the proper ways to address royalty, peers, and nobles. Complete an oral exam with an officer.

   _____ _____
   Official Signature Date

2. Swear fealty to the current King and/or Queen during any court.

   _____ _____
   Official Signature Date

3. With the Herald's permission, make an announcement in court.

   _____ _____
   Official Signature Date

4. For one entire event, keep all mundane objects out of sight.

   _____ _____
   Official Signature Date

5. Present and explain the order of precedence within the Youth Program to any group.

   _____ _____
   Official Signature Date

Chivalry
Research – Yellow Bead

Research 4 areas about medieval chivalry that interest you. Present your findings about each area in a 5-10 minute presentation or in a 3-4 page paper.

1. _____
   Area of Interest

   _____ _____
   Official Signature Date

2. _____
   Area of Interest

   _____ _____
   Official Signature Date

3. _____
   Area of Interest

   _____ _____
   Official Signature Date

4. _____
   Area of Interest

   _____ _____
   Official Signature Date

Complete any 3 of the following requirements:

1. Create a handout or activity sheet based on your research for any level of the Youth Program.

   _____ _____
   Official Signature Date

2. Research and write your own Code of Honor. Display it in a prominent position at an event.

   _____ _____
   Official Signature Date

3. Read a period poem, ballad, or other written work, and explain to an officer it reflects the concept of chivalry.

   _____ _____
   Official Signature Date

4. Create a timeline of a war that occurred during the Middle Ages.

   _____ _____
   Official Signature Date

5. Read about the history and purpose of a knight's vigil. Attend a vigil in the SCA.

   _____ _____
   Official Signature Date

Chivalry
Strategy and Tactics – Blue Bead

Attend 4 classes relating to strategy and tactics of combat or warfare.

1. _____
   Event

   _____ _____
   Official Signature Date

2. _____
   Event

   _____ _____
   Official Signature Date

3. _____
   Event

   _____ _____
   Official Signature Date

4. _____
   Event

   _____ _____
   Official Signature Date

Complete any 3 of the following requirements:

1. Learn to play chess and challenge a fighter to a game.

   _____ _____
   Official Signature Date

2. Participate in any board game tourney or competition.

   _____ _____
   Official Signature Date

3. Using a picture of an actual castle, explain to a fighter how you would attack the castle.

   _____ _____
   Official Signature Date

4. Design and create a picture or model of an "impenetrable" fortress. Display the fortress and explain why your design would work.

   _____ _____
   Official Signature Date

5. Research and write a 2-4 page paper on some aspect of medieval strategy and tactics.

   _____ _____
   Official Signature Date

Chivalry
Silver Award Projects

Write down the silver project you want to complete for any of the areas below. Before you start your project, make sure that an official signs in the "approved by" space. You must earn your colored bead in each of these areas before you can begin the silver project.

Combat Project

_____
_____
_____
_____
_____

_____ _____
Approved By Date

_____ _____
Official Signature of Completion Date

Arms and Armor Project

_____
_____
_____
_____
_____

_____ _____
Approved By Date

_____ _____
Official Signature of Completion Date

Courtly Graces Project

_____
_____
_____
_____
_____

_____ _____
Approved By Date

_____ _____
Official Signature of Completion Date

Chivalry
Silver Award Projects (Cont'd)

Research Project

_____
_____
_____
_____
_____

_____ _____
Approved By Date

_____ _____
Official Signature of Completion Date

Strategy and Tactics Project

_____
_____
_____
_____
_____

_____ _____
Approved By Date

_____ _____
Official Signature of Completion Date

Chivalry
Gold Award Project

Write down the gold project you want to complete for the area of Chivalry. The project should challenge you to go beyond any other Chivalry projects you have done. You must have all your colored beads and at least one silver bead in Service, Chivalry, and Arts & Sciences to start a gold project. Before you start your project, make sure that an official signs in the "approved by" space.

Chivalry Gold Project

_____
_____
_____
_____
_____
_____
_____
_____
_____
_____
_____
_____
_____
_____
_____

_____ _____
Approved By Date

_____ _____
Official Signature of Completion Date

Chivalry
Title Project

Write down the title project you want to complete for the area of Chivalry. The project, which will earn you the title of Warrior, should take at least 30 hours to complete. You must have all your colored beads, all five silver beads in Chivalry, and your gold bead before you can begin your title project. Before you start your project, make sure that an official and a Kingdom youth officer sign in the approval spaces below.

Chivalry Title Project

_____
_____
_____
_____
_____
_____
_____
_____
_____
_____
_____
_____
_____
_____
_____

_____ _____
Approved By (Official) Date

_____ _____
Approved By (Kingdom Youth Officer) Date

_____ _____
Official Signature of Completion Date

Artemisia Youth Program
Registration Form

Last Initial

Minor's Information

Legal Name_____

SCA Name_____

Street Address:_____ City:_____ State:_____ Zip:_____

Home Phone #: ( ) - E-mail:_____ Birthday: / /

Local Group Name_____ Today's Date_____
Barony, Canton, Shire, etc.

Known Medical Conditions_____
_____
_____
_____

Known Allergies_____
_____
_____

Parent(s) or Legal Guardian(s)

Legal Name(s)_____
_____

SCA Name(s) and Titles _____
_____

I hereby attest that I have read and signed an official SCA minor waiver form for the minor listed above. I agree to allow the said minor to participate in Youth Program activities under the conditions and restrictions stated in the official SCA minor waiver.

Signature of Parent(s) or Legal Guardian(s)

_____ Date_____

_____ Date_____